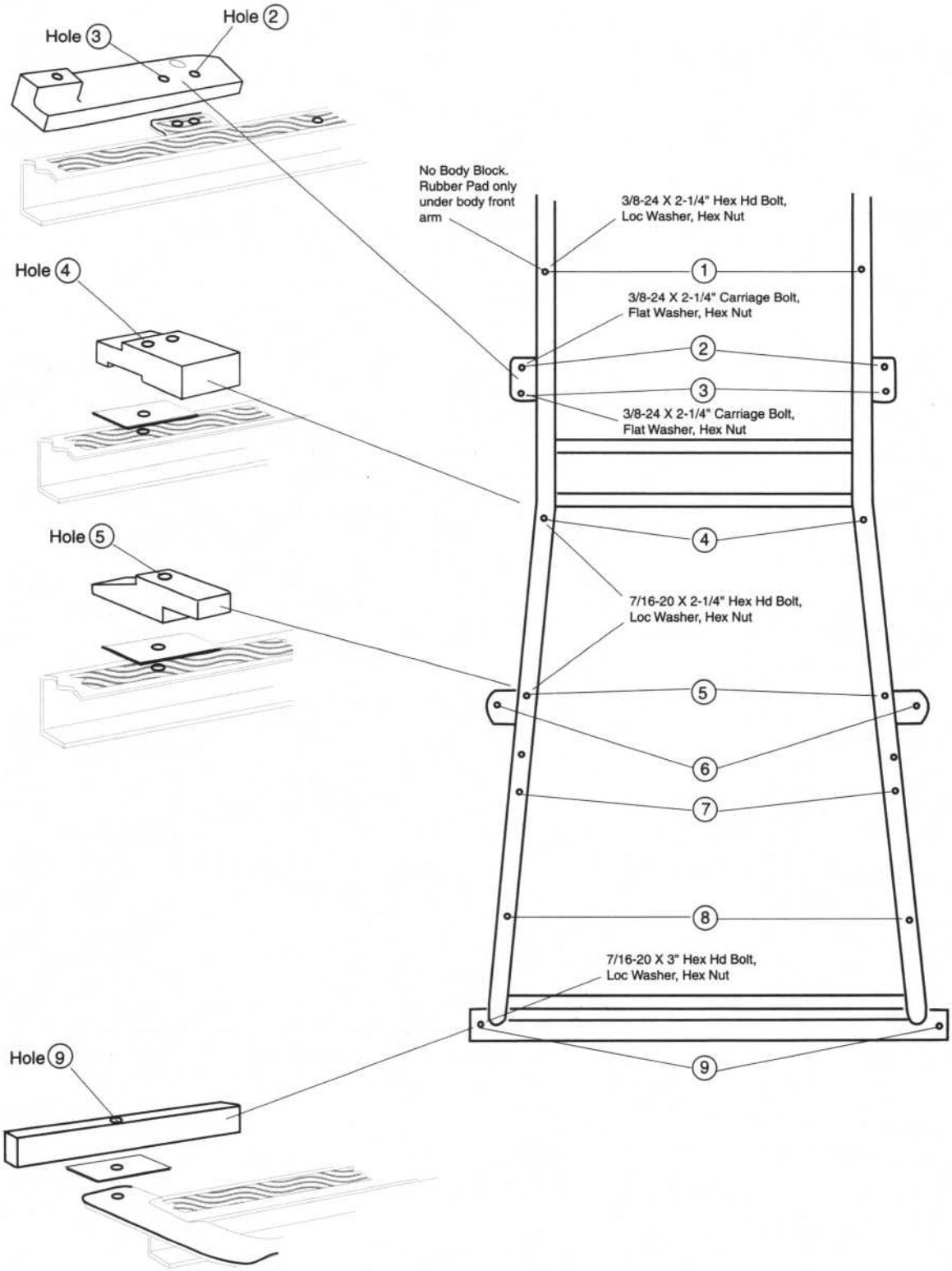

1930/1931 Coupe, Sport Coupe, Bus Coupe

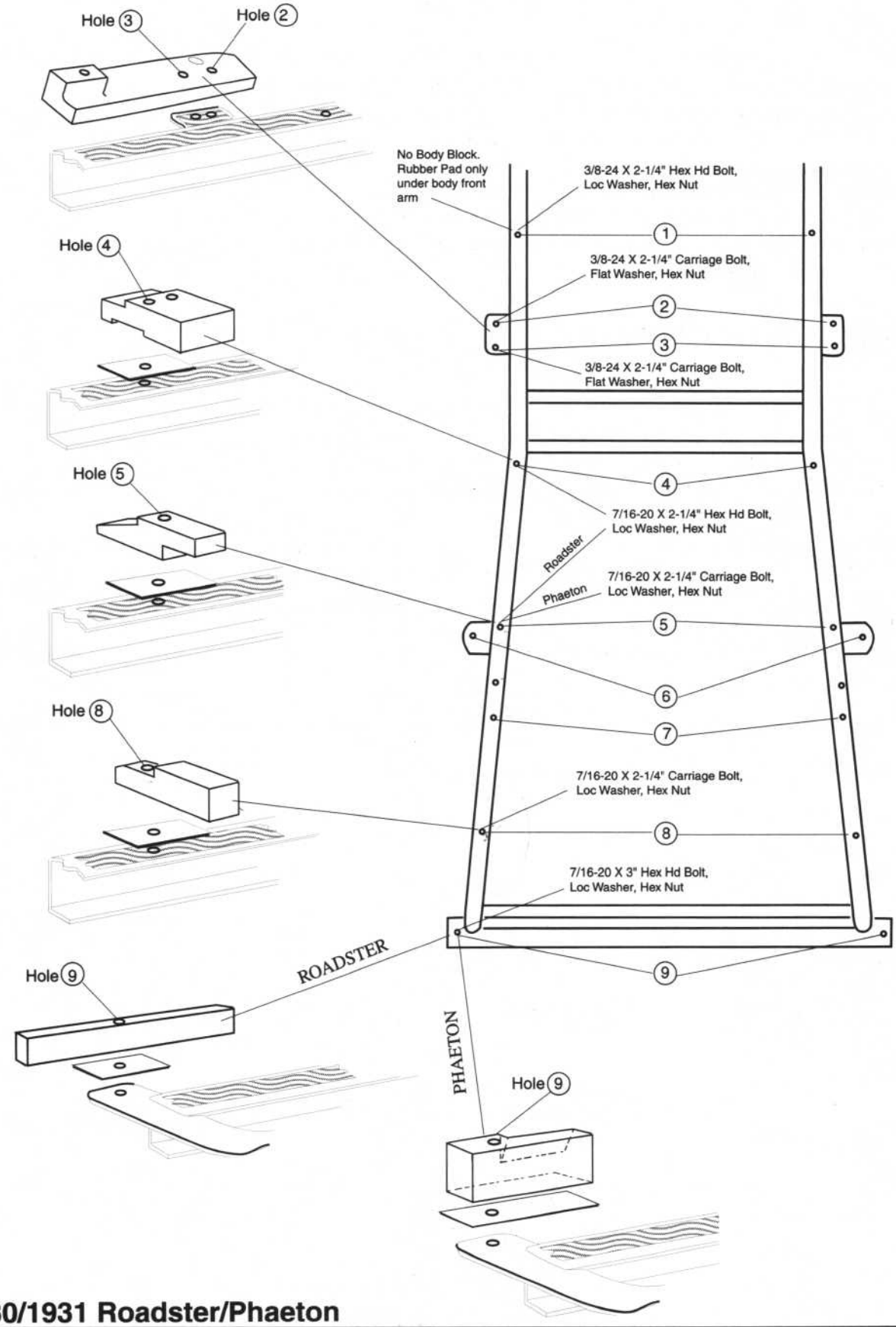
Hole 3
Hole 2
No Body Block. Rubber Pad only under body front arm
3/8-24 X 2-1/4" Hex Hd Bolt, Loc Washer, Hex Nut
1
3/8-24 X 2-1/4" Carriage Bolt, Flat Washer, Hex Nut
2
3
3/8-24 X 2-1/4" Carriage Bolt, Flat Washer, Hex Nut
Hole 4
4
7/16-20 X 2-1/4" Hex Hd Bolt, Loc Washer, Hex Nut
Roadster
Phaeton
7/16-20 X 2-1/4" Carriage Bolt, Loc Washer, Hex Nut
Hole 5
5
6
Hole 8
7
7/16-20 X 2-1/4" Carriage Bolt, Loc Washer, Hex Nut
8
7/16-20 X 3" Hex Hd Bolt, Loc Washer, Hex Nut
9
ROADSTER
Hole 9
PHAETON
Hole 9